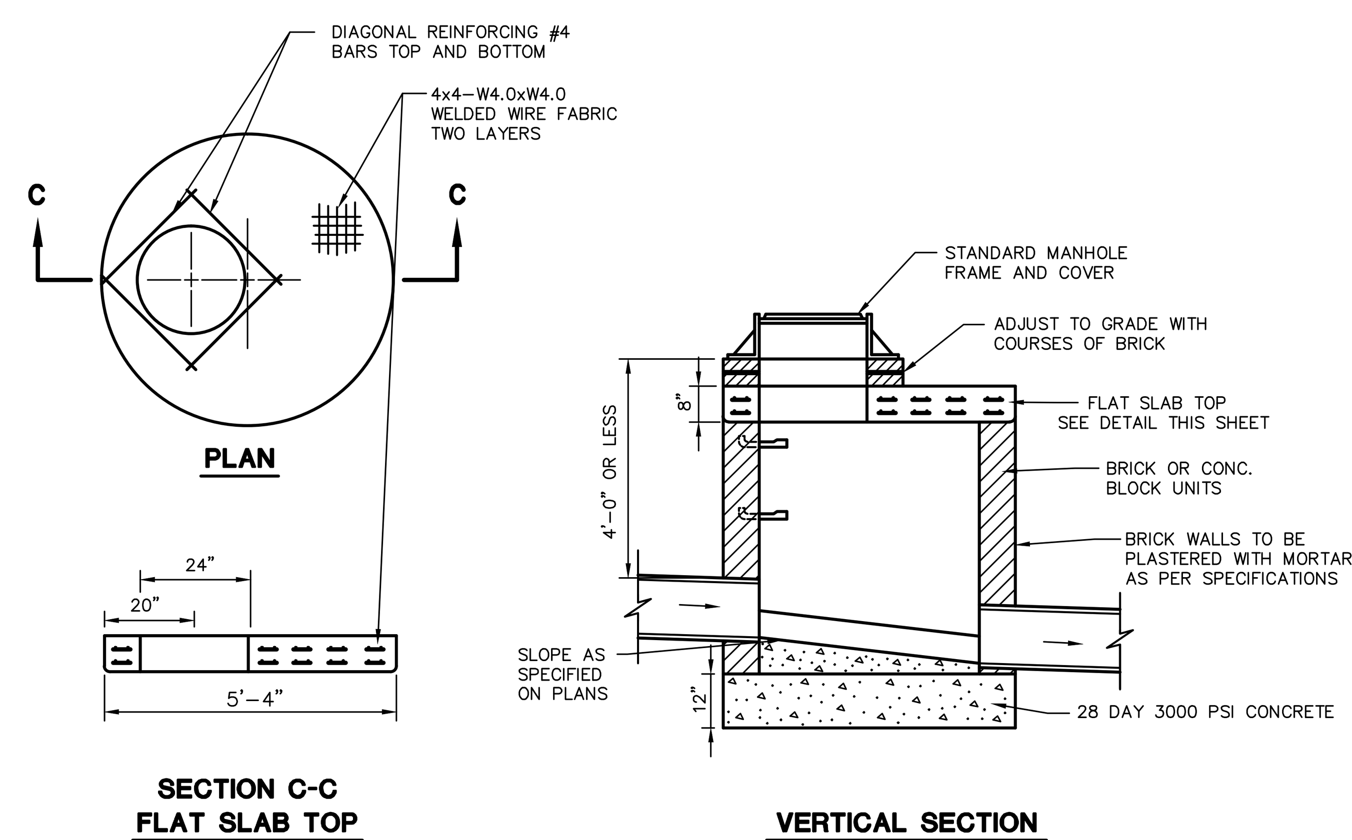

STANDARD SHALLOW SANITARY MANHOLE

N.T.S BLSS–004

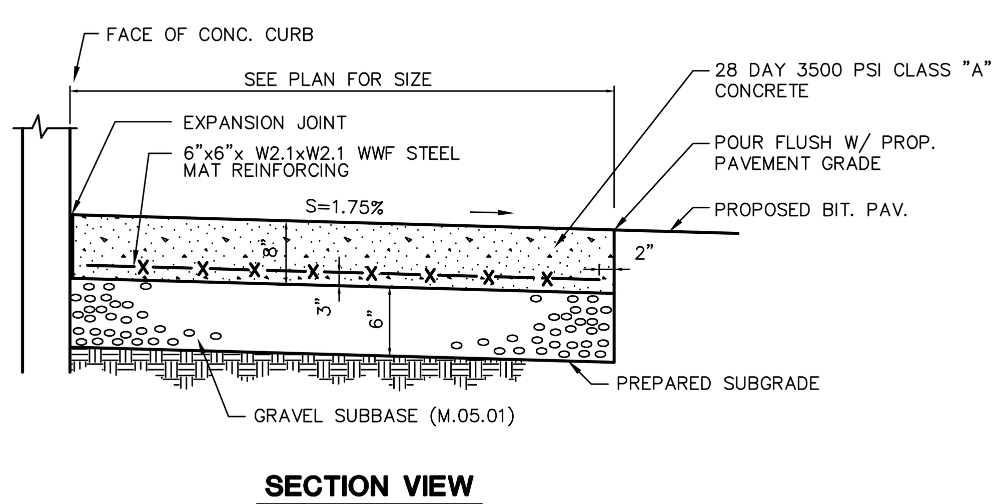

CONCRETE DUMPSTER PAD AND CONCRETE PAVEMENT

N.T.S. BLPC–002

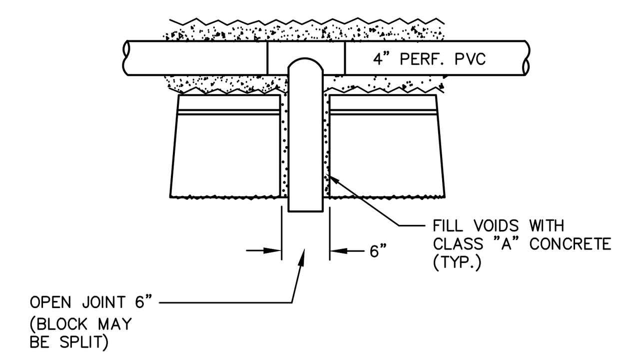

RETAINING WALL DRAIN DETAIL

SCALE: NTS

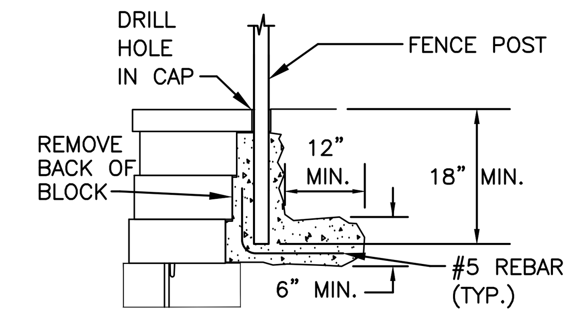

POST DETAIL- SECTION A-A

TYPICAL HANDRAIL AND/OR FENCE POST
SCALE: NONE

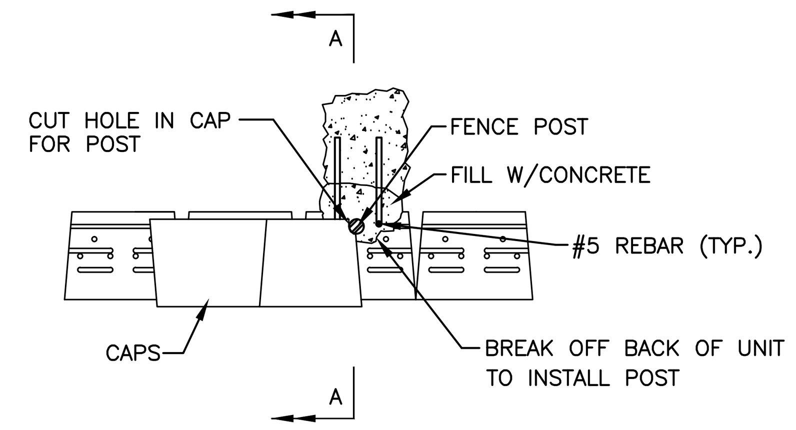

POST DETAIL- PLAN VIEW

TYPICAL HANDRAIL AND/OR FENCE POST
SCALE: NONE

GENERAL NOTES

1. STRIP ALL VEGETATION AND ORGANIC SOIL FROM THE WALL AND GRID ALIGNMENT.
2. BENCH CUT ALL EXCAVATED SLOPES.
3. DO NOT OVER EXCAVATE UNLESS DIRECTED BY SITE SOIL ENGINEER TO REMOVE UNSUITABLE SOIL.
4. SITE SOIL ENGINEER SHALL VERIFY FOUNDATION SOILS AS BEING COMPETENT PER THE DESIGN STANDARDS AND PARAMETERS.
5. LEVELING PAD SHALL CONSIST OF 3/4" FOUNDATION STONE, MINIMUM 6" THICK, MINIMUM 2000 PSI CONCRETE, OR MINIMUM 6" OF 3/4" CRUSHED STONE.
6. MINIMUM EMBEDMENT OF WALL BELOW FINISH GRADE SHALL BE 24".
7. FOLLOW APPLICABLE PROVISIONS OF THE MANUFACTURERS INSTALLATION INSTRUCTIONS AND WRITTEN SPECIFICATIONS.
8. WHERE DRAIN PIPE IS USED, PROVIDE OUTLETS AS SHOWN ON WALL ELEVATIONS.
9. COMPACTION TESTS SHALL BE TAKEN AS THE WALL IS INSTALLED. THE MINIMUM NUMBER OF TESTS SHALL BE DETERMINED BY THE SITE SOILS ENGINEER, OR AS INDICATED IN THE SPECIFICATION.
10. COMPACTION SHALL BE 95% OF MAXIMUM DRY DENSITY PER AASHTO T–99.
11. GEOGRID SHALL BE PER BLOCK MANUFACTURER'S DESIGN ON SHOP DRAWINGS.
12. PULL GEOGRID TIGHT PRIOR TO BACK FILLING. LENGTH OF GEOGRID SHALL BE MEASURED FROM FRONT OF SEGMENTAL CONCRETE UNITS.
13. PROVIDE LATERAL DRAINAGE SWALES TO DIRECT FLOWS AROUND THE ENDS OF THE WALL.
14. ESTABLISH TURF AS SOON AS THE WALL IS COMPLETED.
15. FINAL WALL ALIGNMENT SHALL BE LOCATED IN THE FIELD.
16. REINFORCED BACK FILL REQUIREMENTS FOR THE SEGMENTAL CONCRETE RETAINING WALL SHALL CONFORM TO THE FOLLOWING SPECIFICATIONS:

SIEVE SIZE	PERCENT PASSING REINFORCED BACK FILL
5 INCH	100
3–1/2 INCH	90–100
1–1/2 INCH	55–95
1/4 INCH	25–60
NO. 10	15–45
NO. 40	5–25
NO. 100	0–10
NO. 200	0–5

PLASTICITY INDEX (PI) LESS THAN OR EQUAL TO 10 AND A LIQUID LIMIT LESS THAN OR EQUAL TO 40. REINFORCED BACK FILL SHALL BE PLACED AND COMPACTED IN LIFTS NOT EXCEEDING 10 INCHES. REINFORCED BACK FILL SHALL BE COMPACTED TO 95 PERCENT OF THE MAXIMUM DENSITY AS DETERMINED BY AASHTO T–99. THE MOISTURE CONTENT OF THE BACK FILL MATERIAL PRIOR TO AND DURING COMPACTION SHALL BE WITHIN 2 PERCENTAGE POINTS OF DRY OPTIMUM.

IF CONDITIONS ARE DIFFERENT THAN THOSE STATED IN THESE DRAWINGS AND SPECIFICATIONS, THE CONTRACTOR MUST CONTACT THE ENGINEER PRIOR TO PROCEEDING WITH THE CONSTRUCTION OF THE WALL.

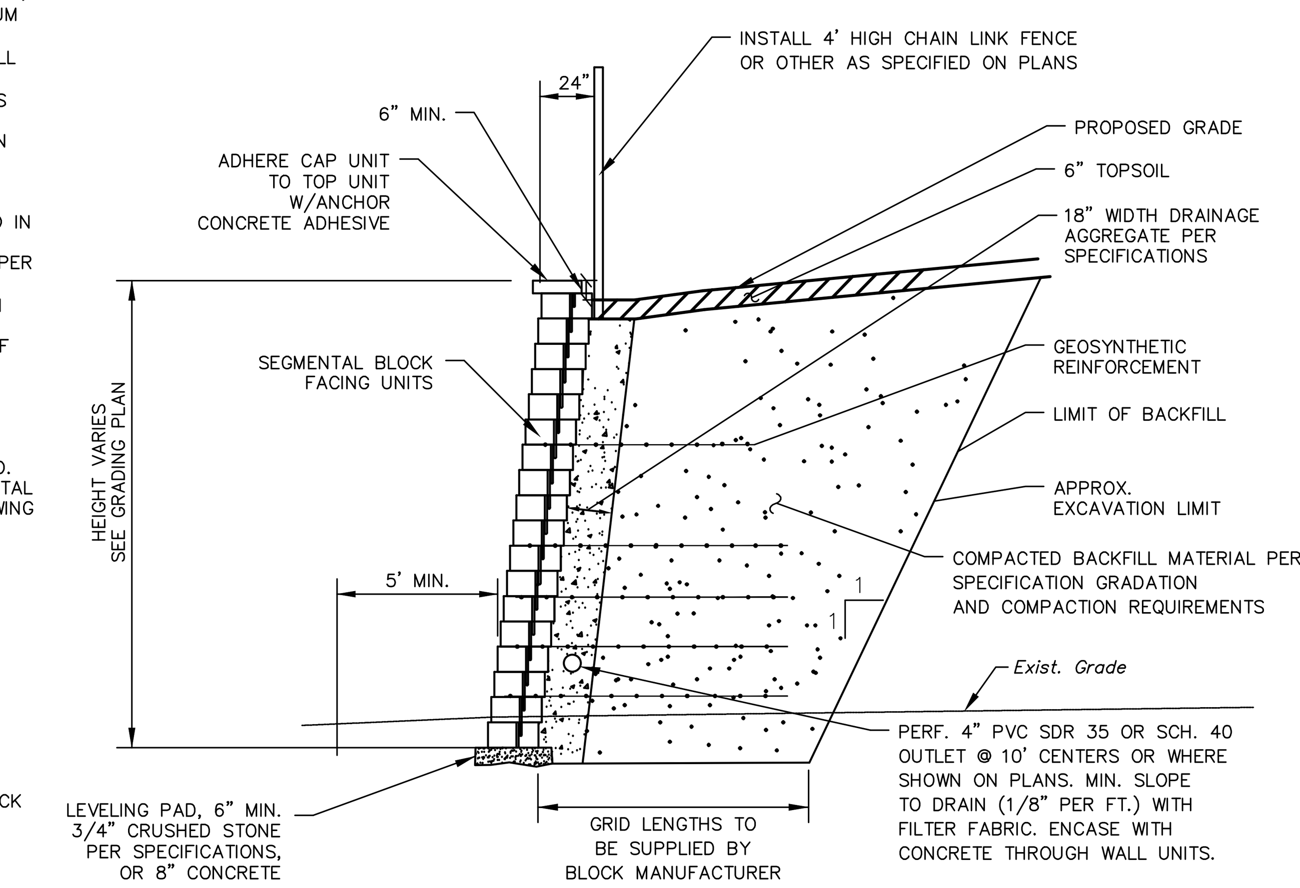

NOTE:
1. BLOCK MANUFACTURER TO SUBMIT SHOP DRAWINGS AND CALCULATIONS FOR RETAINING WALLS PRIOR TO CONSTRUCTION BY CONNECTICUT LICENSED PROFESSIONAL ENGINEER.
2. WALL DRAIN TO BE DISCHARGED AS SHOWN ON SHEET GD–1.

TYPICAL RETAINING WALL SECTION

N.T.S.

NOTE:
1. SIDEWALK RAMPS SHALL HAVE THE FINAL TEXTURE OF THE RAMP SURFACE BE A COARSE BROOM FINISH TRANSVERSE TO THE SLOPE OF THE RAMP.
2. CARE SHALL BE TAKEN TO ASSURE A UNIFORM GRADE ON THE RAMP, FREE OF SAGS AN SHORT GRADE CHANGES.
3. THE BOTTOM OF THE RAMP SHALL MEET THE GUTTER LINE AT THE CURB FACE.
4. ALL RAMPS MUST INCLUDE A DETECTABLE WARNING STRIP SEE DETAIL.

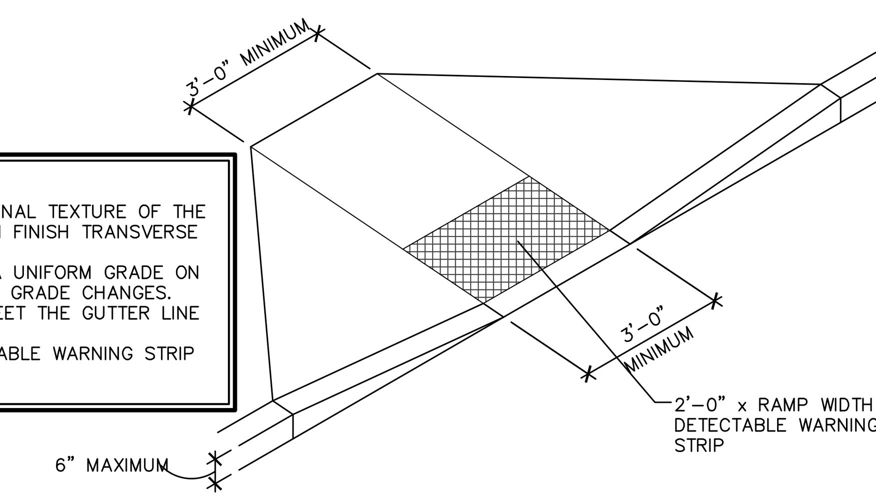

NOTE:
DETECTABLE WARNING SYSTEM MUST BE PRESENT ON SURFACE OF RAMP WHEN SLOPE OF RAMP IS BETWEEN 5.0% AND 8.33% AND AT RAISED SIDEWALKS ADJACENT TO TRAVELWAY

EDGES MUST BE TAPERED WHERE TRUNCATED DOME PLATES ARE EXPOSED

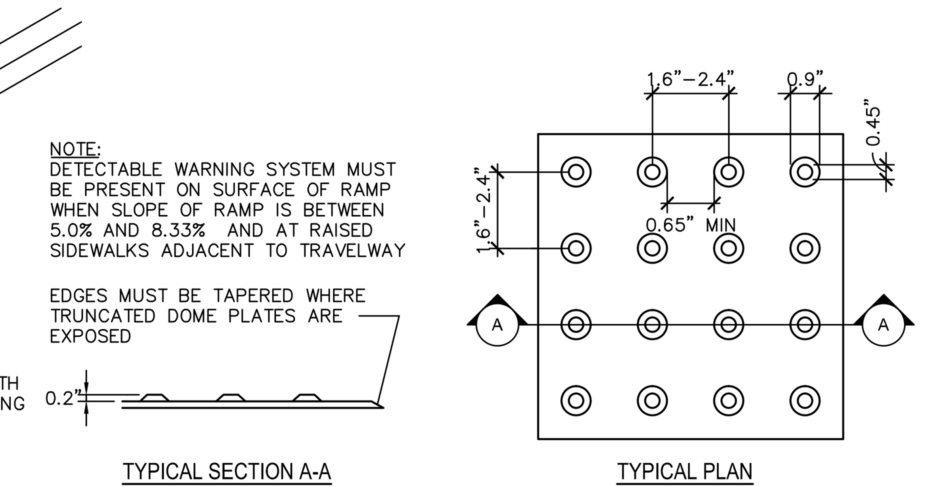

DETECTABLE WARNING STRIP

SCALE: NTS 0108

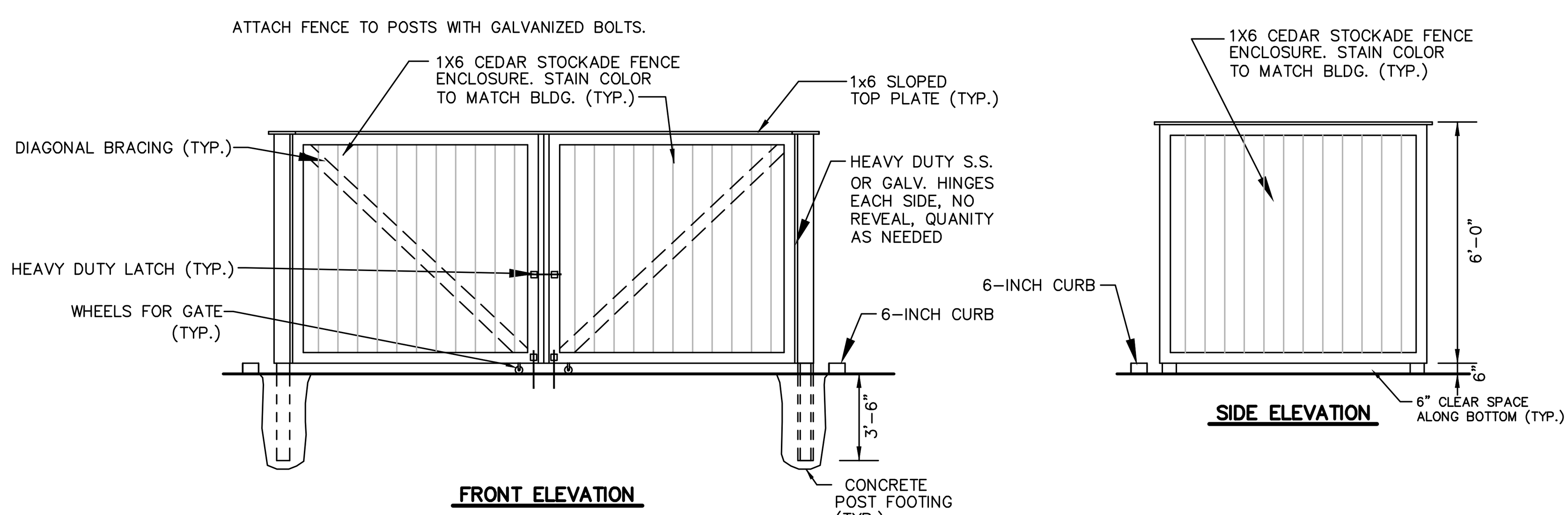

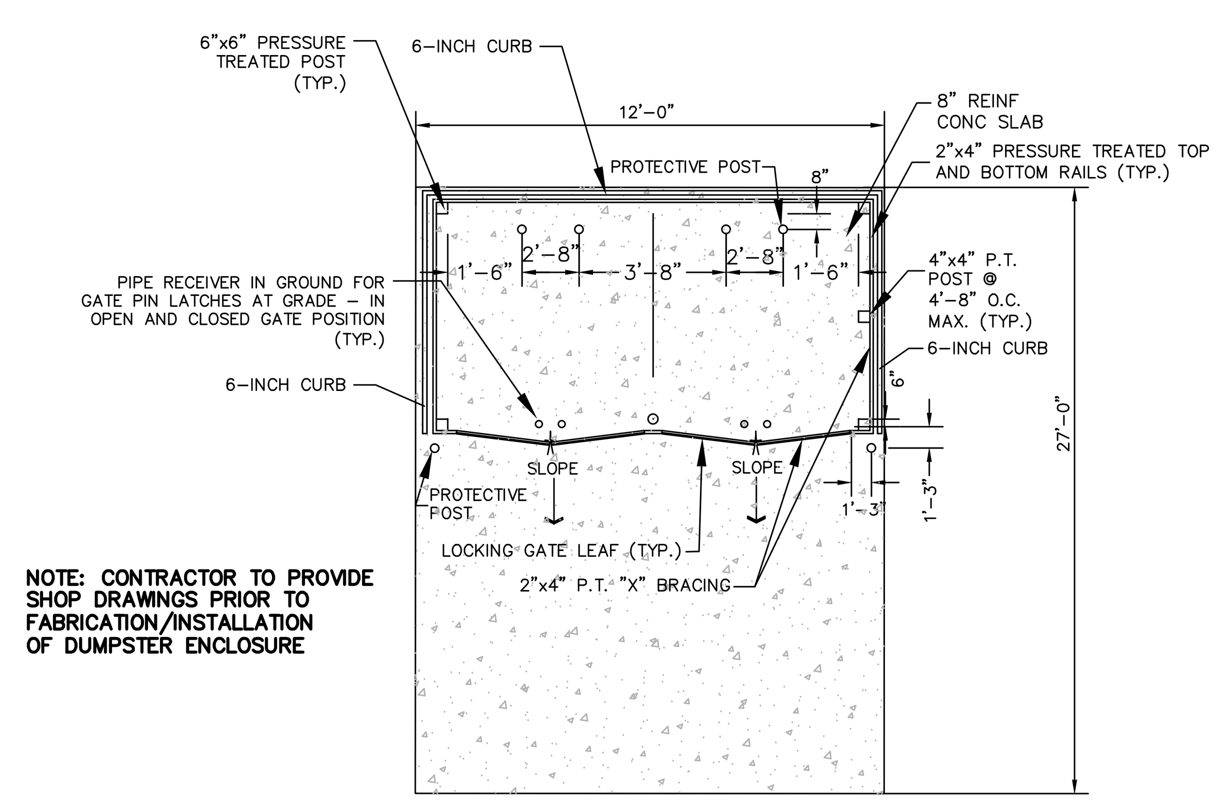

NOTE: CONTRACTOR TO PROVIDE SHOP DRAWINGS PRIOR TO FABRICATION/INSTALLATION OF DUMPSTER ENCLOSURE

TRASH ENCLOSURE PLAN

N.T.S. BLSE–004

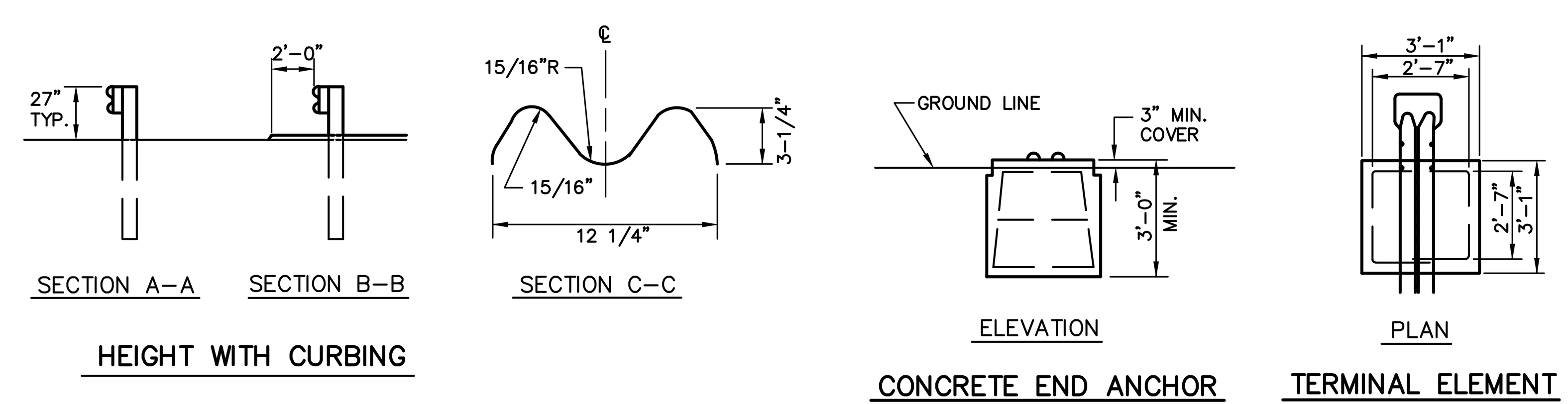

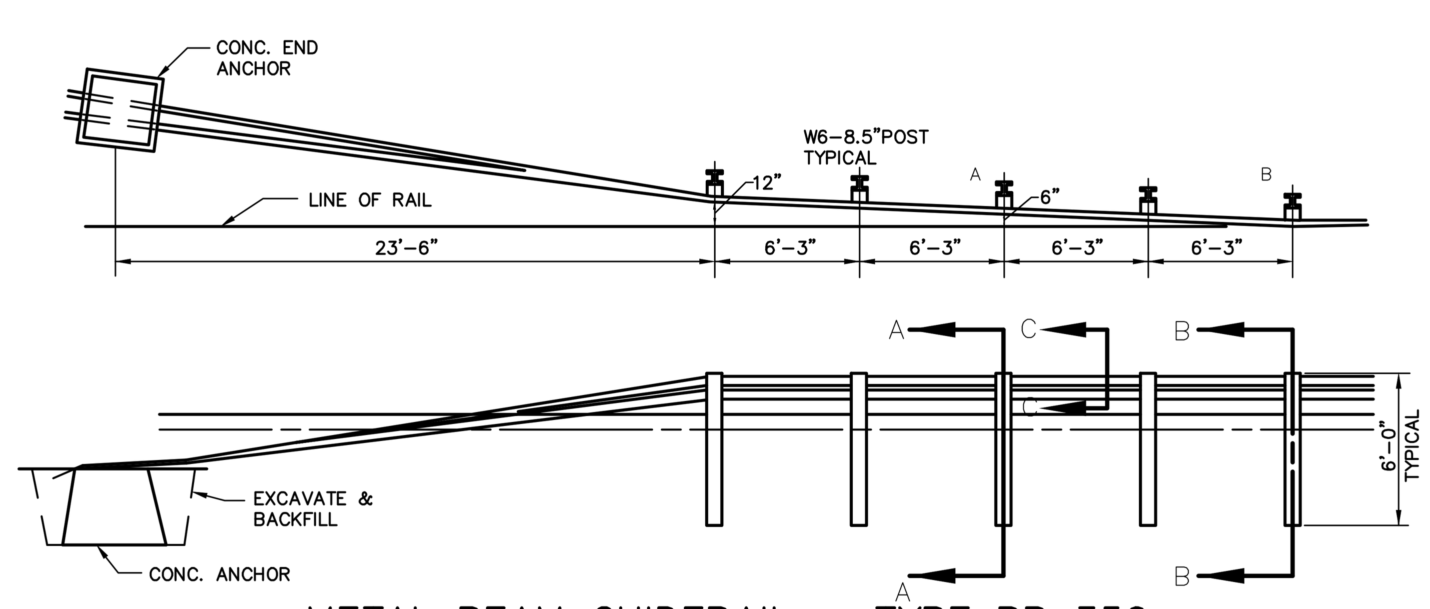

METAL BEAM GUIDERAIL – TYPE RB 350

N.T.S. ZGR–008

NOTE:
CONFIRM BOLLARD SPACING DIMENSIONS SHOWN WITH POWER COMPANY.

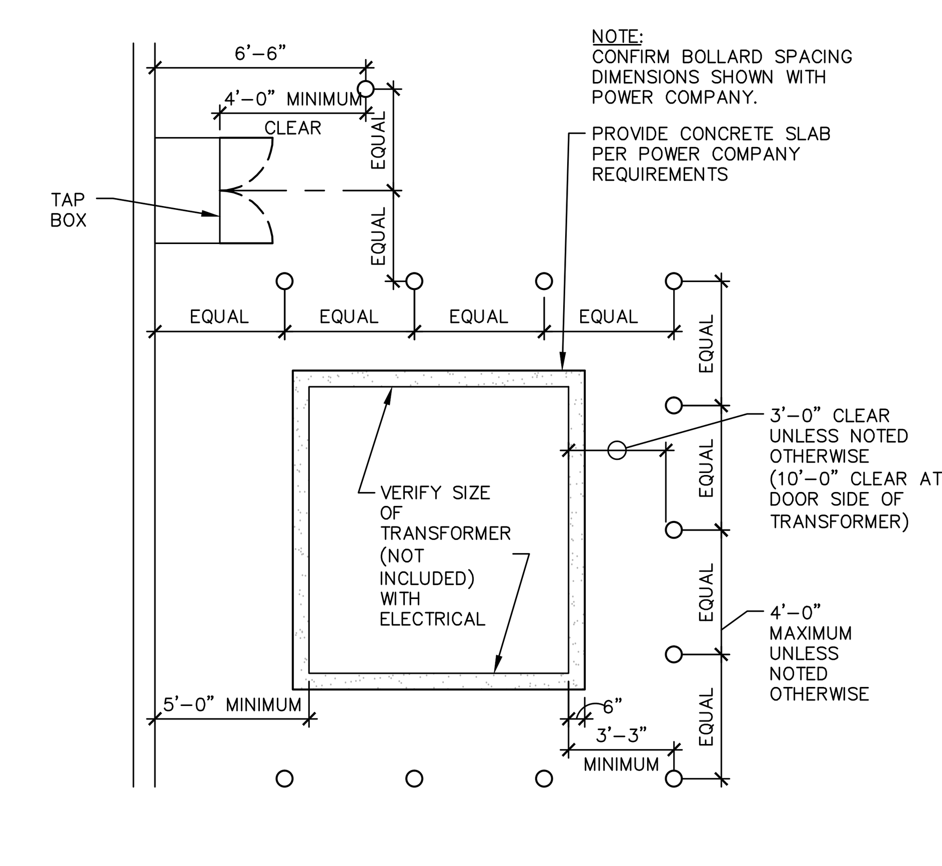

BOLLARDS AT TRANSFORMER

SCALE: NTS 1211

FOR PERMITTING PURPOSES ONLY
NOT RELEASED FOR CONSTRUCTION

BL Companies
ARCHITECTURE
ENGINEERING
ENVIRONMENTAL
LAND SURVEYING

355 Research Parkway
Meriden, CT 06450
(203) 630-1406
(203) 630-2615 Fax

STATE OF CONNECTICUT MICHELLE M. CARLSON No.20951 LICENSED PROFESSIONAL ENGINEER

THE VILLAGE AT MILL POND
11 KILLINGWORTH TURNPIKE
CLINTON, CONNECTICUT 06413

REVISIONS

No.	Date	Desc.
1.	1/22/16	GENERAL REVISION
2.	2/24/16	REVISED PER REVIEW COMMENTS

Designed	---
Drawn	---
Checked	---
Approved	---
Scale	1"=40'
Project No.	14C4892
Date	1/4/16
CAD File:	DN14C489201

Title
SITE DETAILS

Sheet No.
DN-4

Xref (s): : BD14C489202–24x36

2/24/2016, EPIERIDES, G:\JOBS14\14C\14C4892\DWG\DN14C489201.DWG,DN–4 24X36 NTS.

©2016 BL COMPANIES, INC. THESE DRAWINGS SHALL NOT BE UTILIZED BY ANY PERSON, FIRM OR CORPORATION WITHOUT THE SPECIFIC WRITTEN PERMISSION OF BL COMPANIES.