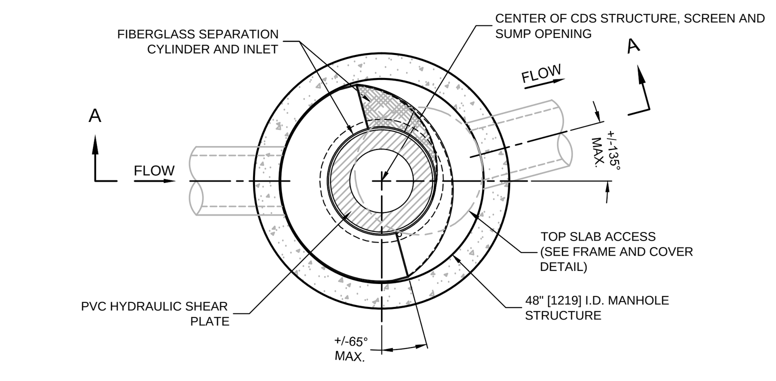

PLAN VIEW B-B
N.T.S.

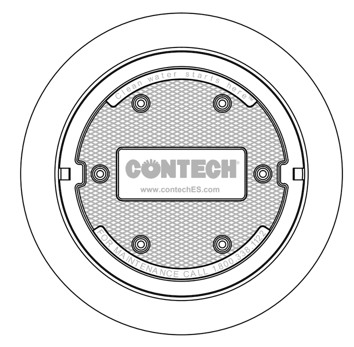

FRAME AND COVER
(DIAMETER VARIES)
N.T.S.

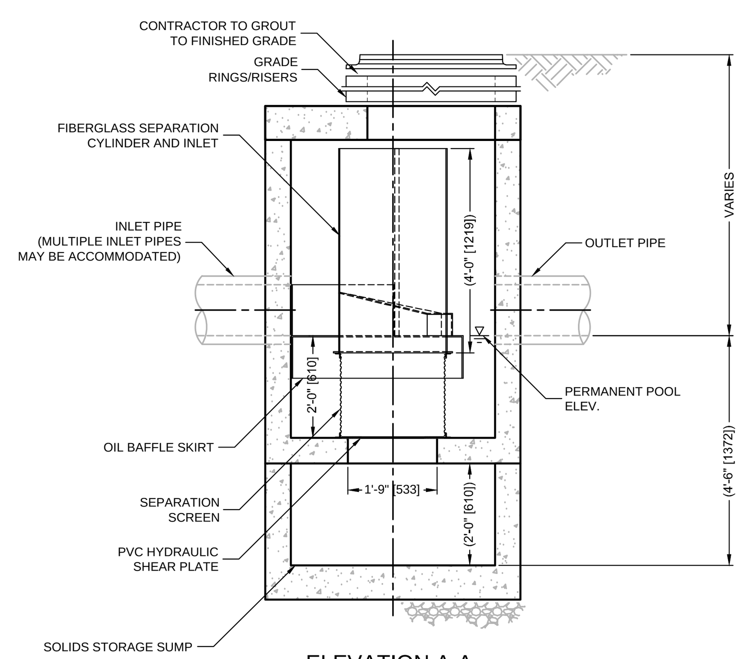

ELEVATION A-A
N.T.S.

Hydrodynamic Separator	WQF cfs	Hydrodynamic Separator Unit (Or approved Equal)
HDS-101	3.26	High Efficiency CDS 3035
HDS-201	0.97	High Efficiency CDS 2015-4
HDS-301	0.7	High Efficiency CDS 2015-4
HDS-401	1.27	High Efficiency CDS 2015
HDS-501	0.93	High Efficiency CDS 2015-4
HDS-601	1.89	High Efficiency CDS 2020
HDS-701	0.92	High Efficiency CDS 2015-4

GENERAL NOTES

1. CONTECH TO PROVIDE ALL MATERIALS UNLESS NOTED OTHERWISE.
2. DIMENSIONS MARKED WITH ( ) ARE REFERENCE DIMENSIONS. ACTUAL DIMENSIONS MAY VARY.
3. FOR FABRICATION DRAWINGS WITH DETAILED STRUCTURE DIMENSIONS AND WEIGHTS, PLEASE CONTACT YOUR CONTECH ENGINEERED SOLUTIONS LLC REPRESENTATIVE. www.contechES.com
4. CDS WATER QUALITY STRUCTURE SHALL BE IN ACCORDANCE WITH ALL DESIGN DATA AND INFORMATION CONTAINED IN THIS DRAWING.
5. STRUCTURE SHALL MEET AASHTO HS20 AND CASTINGS SHALL MEET HS20 (AASHTO M 306) LOAD RATING, ASSUMING GROUNDWATER ELEVATION AT, OR BELOW, THE OUTLET PIPE INVERT ELEVATION. ENGINEER OF RECORD TO CONFIRM ACTUAL GROUNDWATER ELEVATION.
6. PVC HYDRAULIC SHEAR PLATE IS PLACED ON SHELF AT BOTTOM OF SCREEN CYLINDER. REMOVE AND REPLACE AS NECESSARY DURING MAINTENANCE CLEANING.

INSTALLATION NOTES

A. ANY SUB-BASE, BACKFILL DEPTH, AND/OR ANTI-FLOTATION PROVISIONS ARE SITE-SPECIFIC DESIGN CONSIDERATIONS AND SHALL BE SPECIFIED BY ENGINEER OF RECORD.
B. CONTRACTOR TO PROVIDE EQUIPMENT WITH SUFFICIENT LIFTING AND REACH CAPACITY TO LIFT AND SET THE CDS MANHOLE STRUCTURE (LIFTING CLUTCHES PROVIDED).
C. CONTRACTOR TO ADD JOINT SEALANT BETWEEN ALL STRUCTURE SECTIONS, AND ASSEMBLE STRUCTURE.
D. CONTRACTOR TO PROVIDE, INSTALL, AND GROUT PIPES. MATCH PIPE INVERTS WITH ELEVATIONS SHOWN.
E. CONTRACTOR TO TAKE APPROPRIATE MEASURES TO ASSURE UNIT IS WATER TIGHT, HOLDING WATER TO FLOWLINE INVERT MINIMUM. IT IS SUGGESTED THAT ALL JOINTS BELOW PIPE INVERTS ARE GROUTED.

HYDRODYNAMIC SEPARATOR

SCALE: NTS

STORMTRAP INSTALLATION SPECIFICATION

1. STORMTRAP MODULES SHALL BE MANUFACTURED ACCORDING TO SHOP DRAWINGS APPROVED BY THE INSTALLING CONTRACTOR AND ENGINEER. THE SHOP DRAWINGS SHALL INDICATE SIZE AND LOCATION OF ROOF OPENINGS AND INLET/ OUTLET PIPE OPENINGS.
2. STORMTRAP SHALL BE INSTALLED IN ACCORDANCE WITH ASTM C89 STANDARD PRACTICE FOR INSTALLATION OF UNDERGROUND PRE-CAST CONCRETE UTILITY STRUCTURES. THE FOLLOWING ADDITIONS AND/OR EXCEPTIONS SHALL APPLY:
   A. SPECIFICATIONS ON THE ENGINEER'S DRAWINGS SHALL TAKE PRECEDENCE.
   B. THE STONE FOUNDATION HAS BEEN DESIGNED BASED ON THE FOLLOWING ASSUMPTIONS. THESE ASSUMPTIONS WILL NEED TO BE VERIFIED BY A GEOTECHNICAL ENGINEER WHICH WILL NEED TO BE EMPLOYED BY THE OWNER.
      1. A QUALIFIED GEOTECHNICAL ENGINEER WILL BE EMPLOYED, BY OWNER, TO PROVIDE ASSISTANCE IN EVALUATING THE EXISTING SOIL CONDITIONS AT THE ELEVATION THE STONE FOUNDATION IS TO BE PLACED. IF A STONE FOUNDATION IS TO BE USED FOR THIS CONDITION, THE BEARING PRESSURE OF THE SOILS AT THIS LEVEL WILL NEED TO MEET OR EXCEED 4000 PSF ALLOWABLE CAPACITY. IF THIS IS NOT POSSIBLE, THE GEOTECHNICAL ENGINEER MUST MAKE REMEDIAL RECOMMENDATIONS IN ORDER TO REACH THIS CAPACITY. IF THIS IS NOT POSSIBLE, THE STONE FOUNDATION MAY NOT BE AN OPTION FOR THIS LOCATION.
      2. A QUALIFIED GEOTECHNICAL ENGINEER WILL BE EMPLOYED, BY OWNER, TO EVALUATE A SOURCE OF STONE AGGREGATES THAT WILL BE PLACED ON THE PROPERLY COMPACTED 4000 PSF ALLOWABLE CAPACITY SOILS. THE STONE BASE COURSE FOR WHICH THE STORMTRAP SYSTEM WILL BEAR DIRECTLY ON WILL NEED TO ATTAIN A MINIMUM 20,000 PSF ALLOWABLE BEARING CAPACITY. STORMTRAP HAS RECOMMENDED A MINIMUM BED OF 3/4" DIAMETER ANGULAR STONE WELL COMPACTED AND SEATED, WITH NO FINES AT A 3 INCH THICKNESS AND AN ADDITIONAL 3 INCH DIAMETER CRUSHED ANGULAR STONE, WELL COMPACTED AND SEATED, WITH NO FINES AT A 15 INCH THICKNESS. PLEASE NOTE THAT THESE ARE ONLY MINIMUM RECOMMENDATIONS AND A QUALIFIED GEOTECHNICAL ENGINEER SHALL BE USED TO DETERMINE THE EXACT REQUIREMENTS FOR THE LOCATIONS THAT THE STORMTRAP SYSTEM IS TO BE LOCATED.
      3. THE CONTRACTOR SHALL REMOVE ANY AND ALL EXPANDABLE OR COLLAPSIBLE SOILS AT THE DIRECTION OF A QUALIFIED GEOTECHNICAL ENGINEER.
      4. THE STONE SHALL BE INSTALLED A MINIMUM OF 2'-0" BEYOND THE LIMITS OF THE STORMTRAP MODULES PERIMETER.
      5. USE CRUSHED ANGULAR STONE AND COMPACT THE STONE USING A VIBRATING ROLLER WITH IT'S FULL DYNAMIC FORCE APPLIED TO ACHIEVE A FLAT SURFACE.
      6. DISK, DRY, AND COMPACT THE TOP 8" OF THE SUBGRADE SOILS TO 95% OF THE STANDARD DRY DENSITY AND 110% OPTIMUM MOISTURE CONTENT.
   C. AGGREGATE SHALL BE GRADED TO WITHIN +/- 1/4" OF THE GRADE SHOWN ON THE PLANS
   D. MINIMUM 4000 PSF SOIL BEARING CAPACITY. SOIL STRENGTHS TO BE VERIFIED IN FIELD BY OTHERS.
   E. THE STORMTRAP MODULES SHALL BE PLACED SUCH THAT THE MAXIMUM SPACE BETWEEN ADJACENT MODULES DOES NOT EXCEED 3/4". IF THE SPACE EXCEEDS 3/4", THE MODULES SHALL BE RESET WITH APPROPRIATE ADJUSTMENT MADE TO LINE AND GRADE TO BRING THE SPACE INTO SPECIFICATION.
   F. ALL EXTERIOR JOINTS BETWEEN ADJACENT STORMTRAP MODULES SHALL BE SEALED WITH PRE-FORMED, COLD-APPLIED, SELF-ADHERING ELASTOMERIC RESIN BONDED TO A WOVEN HIGHLY PUNCTURE RESISTANT POLYMER WRAP CONFORMING TO ASTM C891-09 AND SHALL BE 0'-8" WIDE WITH INTEGRATED PRIMER SEALANT AS APPROVED BY STORMTRAP. THE ADHESIVE EXTERIOR JOINT WRAP SHALL BE INSTALLED ACCORDING TO THE FOLLOWING INSTALLATION INSTRUCTIONS:
      1. USE A BRUSH OR WET CLOTH TO THOROUGHLY CLEAN THE OUTSIDE SURFACE AT THE POINT WHERE THE JOINT WRAP IS TO BE APPLIED.
      2. A RELEASE PAPER PROTECTS THE ADHESIVE SIDE OF THE JOINT WRAP. PLACE THE ADHESIVE TAPE (ADHESIVE SIDE DOWN) AROUND THE STRUCTURE, REMOVING THE RELEASE PAPER AS YOU GO. PRESS THE JOINT WRAP FIRMLY AGAINST THE STORMTRAP MODULE SURFACE WHEN APPLYING.
   G. THE BACKFILL PLACED AROUND THE STORMTRAP UNITS MUST BE DEPOSITED ON BOTH SIDES AT THE SAME TIME AND TO APPROXIMATELY THE SAME ELEVATION. AT NO TIME SHALL THE FILL BEHIND ONE SIDE WALL BE MORE THAN 2'-0" HIGHER THAN THE FILL ON THE OPPOSITE SIDE. BACKFILL SHALL BE COMPACTED TO 95% STANDARD PROCTOR DENSITY OR OTHERWISE SPECIFIED BY ENGINEER. CARE SHALL BE TAKEN TO PREVENT ANY WEDGING ACTION AGAINST THE STRUCTURE, AND ALL SLOPES BOUNDING OR WITHIN THE AREA TO BE BACKFILLED MUST BE STEPPED OR SERRATED TO PREVENT WEDGE ACTION. CARE SHALL ALSO BE TAKEN AS NOT TO DISRUPT THE JOINT WRAP FROM THE JOINT DURING THE BACKFILL PROCESS. BACKFILL MATERIAL TO CONSIST OF 1/4" TO 3/4" WASHED COARSE AGGREGATE STONE OR APPROVED EQUAL.
   H. DISTRIBUTE THE FILL OVER THE SYSTEM WITH A TRACKED CONSTRUCTION VEHICLE, DO NOT EXCEED THE MAXIMUM ALLOWABLE GROUND PRESSURE SHOWN IN TABLE 1.

TABLE 1.

FILL DEPTH	TRACK WIDTH	MAX GROUND PRESSURE
12"	12"	1690 psf
	18"	1219 psf
	24"	1111 psf
	30"	1000 psf
	36"	924 psf

MAXIMUM ALLOWABLE GROUND PRESSURE IS THE VEHICLE OPERATING WEIGHT DIVIDED BY THE TOTAL VEHICLE TRACK-GROUND CONTACT AREA, FOR BOTH TRACKS.

USE A WALK-BEHIND OR VIBRATORY ROLLER, NOT TO EXCEED A MAXIMUM GROSS VEHICLE WEIGHT OF 12,000# AND A MAXIMUM DYNAMIC FORCE OF 20,000#, WITH A MINIMUM OF 12" OF COMPACTED FILL OVER THE SYSTEM.

FULL DUMP TRUCKS MUST NOT BE DRIVEN OR DUMP STONE OVER THE SYSTEM. RAISING THE BODY TO DUMP STONE SIGNIFICANTLY INCREASES THE REAR WHEEL LOADS.

STORMTRAP SPECIFICATION

1. TOTAL COVER: MIN. 1.08' MAX. 4.00' CONSULT STORMTRAP FOR ADDITIONAL COVER OPTIONS.
2. CONCRETE CHAMBER DESIGNED FOR AASHTO HS-20 HIGHWAY LOADING. MIN. SOIL PRESSURE 4000 PSF.
3. ALL DIMENSIONS AND SOIL CONDITIONS, INCLUDING BUT NOT LIMITED TO GROUNDWATER AND SOIL BEARING CAPACITY ARE TO BE VERIFIED IN THE FIELD BY OTHERS PRIOR TO STORMTRAP INSTALLATION.
4. FOR STRUCTURAL CALCULATIONS THE GROUND WATER TABLE IS ASSUMED TO BE BELOW THE SYSTEMS INVERT. IF WATER TABLE IS DIFFERENT THAN ASSUMED, CONTACT STORMTRAP.
5. FOR STRUCTURAL CALCULATIONS THE SOIL DENSITY IS ASSUMED TO BE 120 PCF.

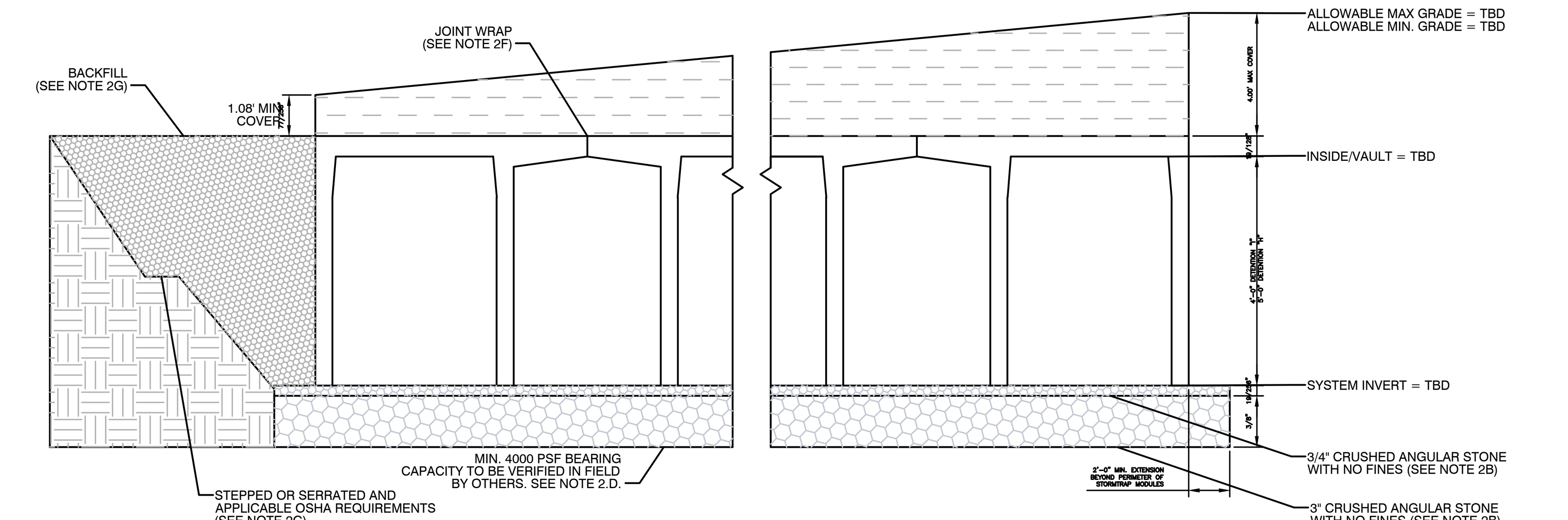

SINGLETRAP

*FOR STRUCTURAL CALCULATIONS THE GROUND WATER TABLE IS ASSUMED TO BE BELOW THE SYSTEMS INVERT. IF WATER TABLE IS DIFFERENT THAN ASSUMED, CONTACT STORMTRAP.

UNDERGROUND STORMWATER DETENTION SYSTEM

SCALE: NTS

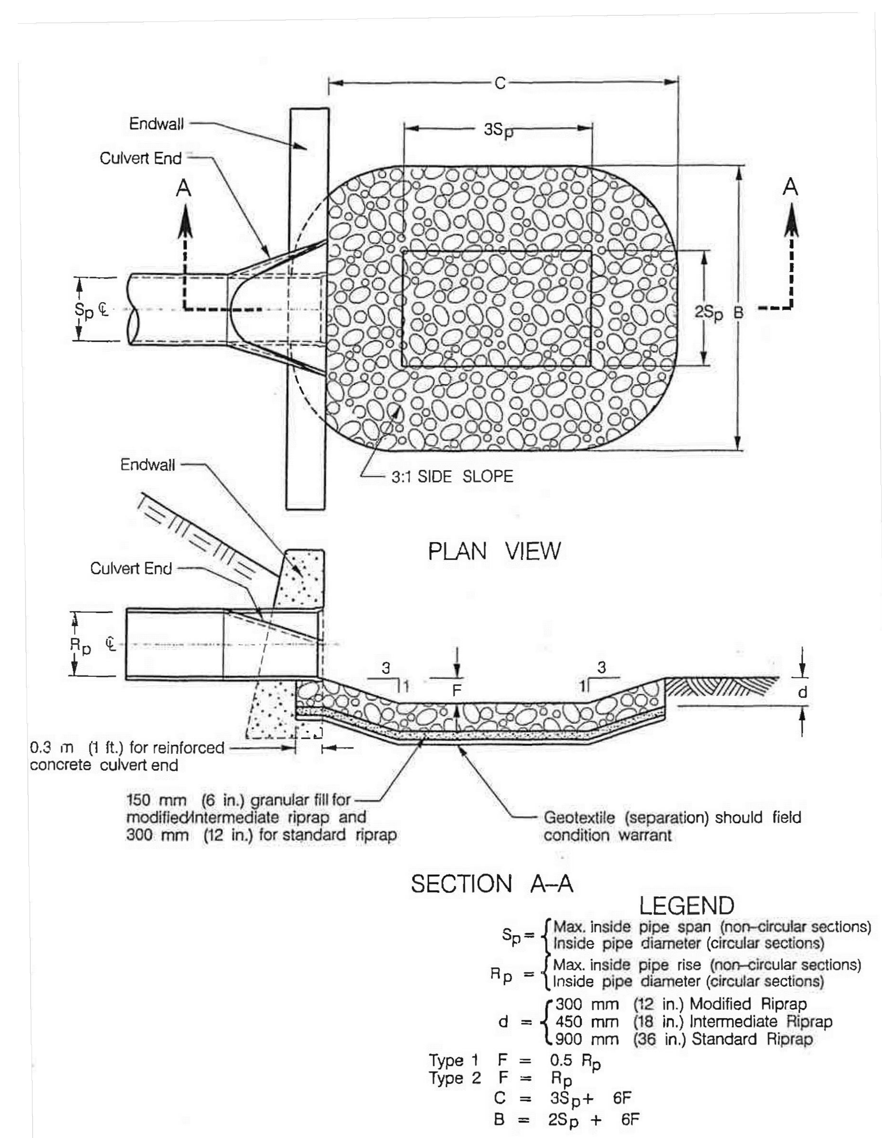

Outlet Number	Velocity (fps)	Flow (cfs)	Pipe Diameter Sp (in)	Tailwater Depth TW (ft)	Type	B (ft)	C (ft)	d_{50} (ft)	2Sp (ft)	3Sp (ft)	F (ft)	Riprap Type
Outlet 201	5.08	23.14	30	2.19	2	20	23	0.11	5.0	7.5	1.25	Modified
Outlet 301	4.54	5.20	15	1.10	2	10	11	0.08	2.5	3.8	0.625	Modified
Outlet 401	6.71	6.89	15	0.97	2	10	11	0.12	2.5	3.8	0.625	Modified
Outlet 501	7.67	5.23	12	0.81	2	8	9	0.14	2.0	3.0	0.5	Modified
Outlet 601	3.85	10.53	24	1.63	2	16	18	0.07	4.0	6.0	1	Modified
Outlet 701	13.81	9.05	24	0.52	1	10	12	0.18	4.0	6.0	1	Standard

RIP RAP SCOUR HOLE

SCALE: NTS

FOR PERMITTING PURPOSES ONLY
NOT RELEASED FOR CONSTRUCTION

Companies
ARCHITECTURE
ENGINEERING
ENVIRONMENTAL
LAND SURVEYING

355 Research Parkway
Meriden, CT 06450
(203) 630-1406
(203) 630-2615 Fax

THE VILLAGE AT MILL POND
11 KILLINGWORTH TURNPIKE
CLINTON, CONNECTICUT 06413

REVISIONS

No.	Date	Desc.
1.	1/22/16	GENERAL REVISION

Designed	---
Drawn	---
Checked	---
Approved	---
Scale	1"=40'
Project No.	14C4892
Date	1/4/16

CAD File: DN14C489201

Title
SITE DETAILS

Sheet No.
DN-5

Xref (s): ; BD14C489202-24x36

1/22/2016, KKILGUSS, G:\JOBS14\14C\14C4892\DWG\DN14C489201.DWG,DN-5 24X36 NTS.

©2016 BL COMPANIES, INC. THESE DRAWINGS SHALL NOT BE UTILIZED BY ANY PERSON, FIRM OR CORPORATION WITHOUT THE SPECIFIC WRITTEN PERMISSION OF BL COMPANIES.